REVISIONS				
ZONE	REV.	DESCRIPTION	DATE	APPROVED
	B	E-number added	2019-07-31	joan

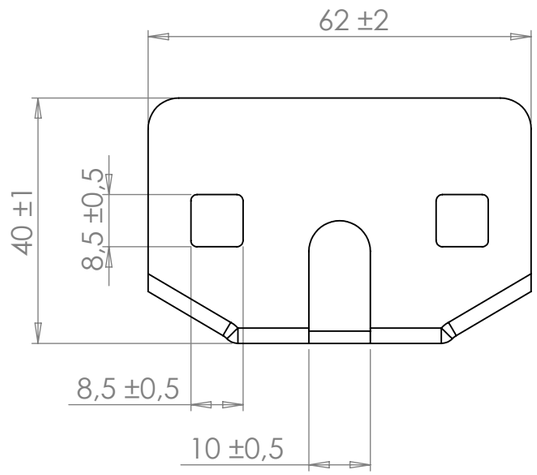

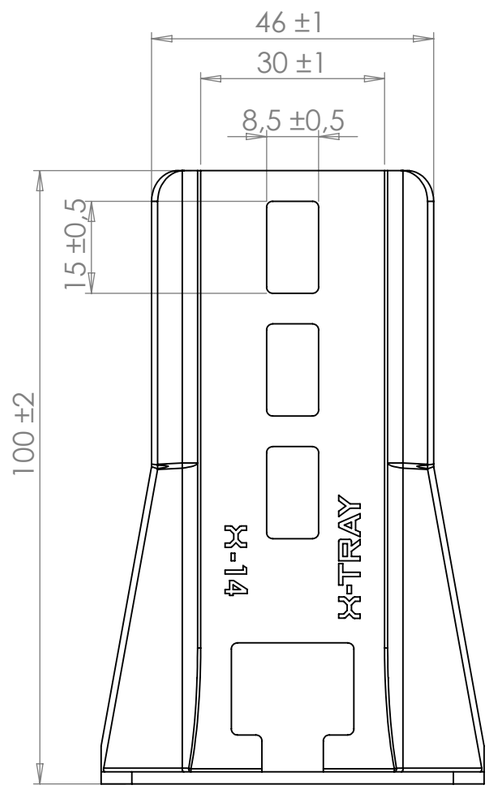

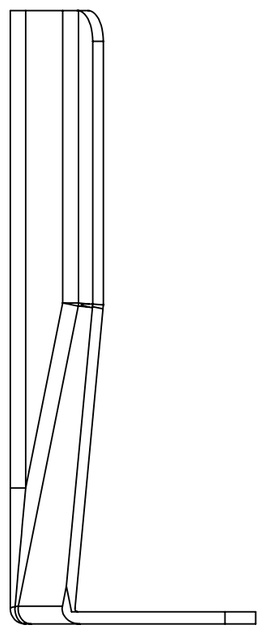

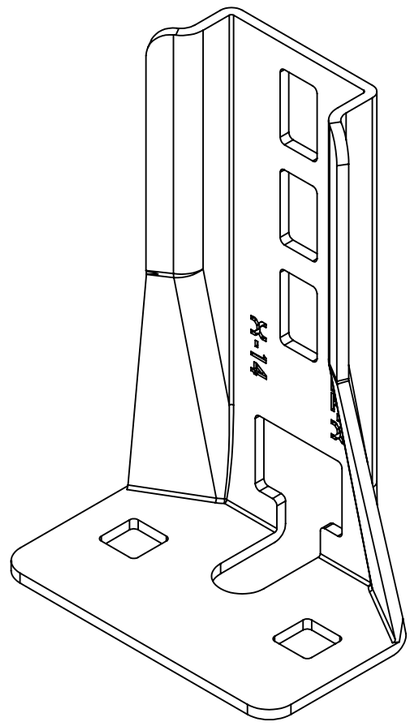

Article number	E-number	Type
2114-100	1133223	Zink plated DIN 50961
2214-100	1133275	Zinc-Nickel DIN 50979
2314-100	1133329	Acid proof AISI 316L
2714-100	1133393	Black Zinc Fe/Zn8/P4

© 2018 Axelent AB

Axelent AB
+46 (0)370 37 37 30
Hillerstorp, Sweden

C-number **C-0006296-01**	Material	Finish / Color	Created By **suem**
Description X14 Ceiling fitting 100	Part / Assembly-ID **Default(A-0006061)** Rev. **A.0**	Sheet Name **Sheet1**	Created **2011-12-16**
	Drawing-ID **KR-2014-100** Rev. **B.1**	Sheet **A3**	Changed **2019-07-31** **joan**
Unless otherwise specified; SS-ISO 2768-1 MEDIUM	Weight (calculated) **0,12 kg**	Scale **1:1**	