REVISIONS				
ZONE	REV.	DESCRIPTION	DATE	APPROVED
	A	E-Number	2020-10-27	svma

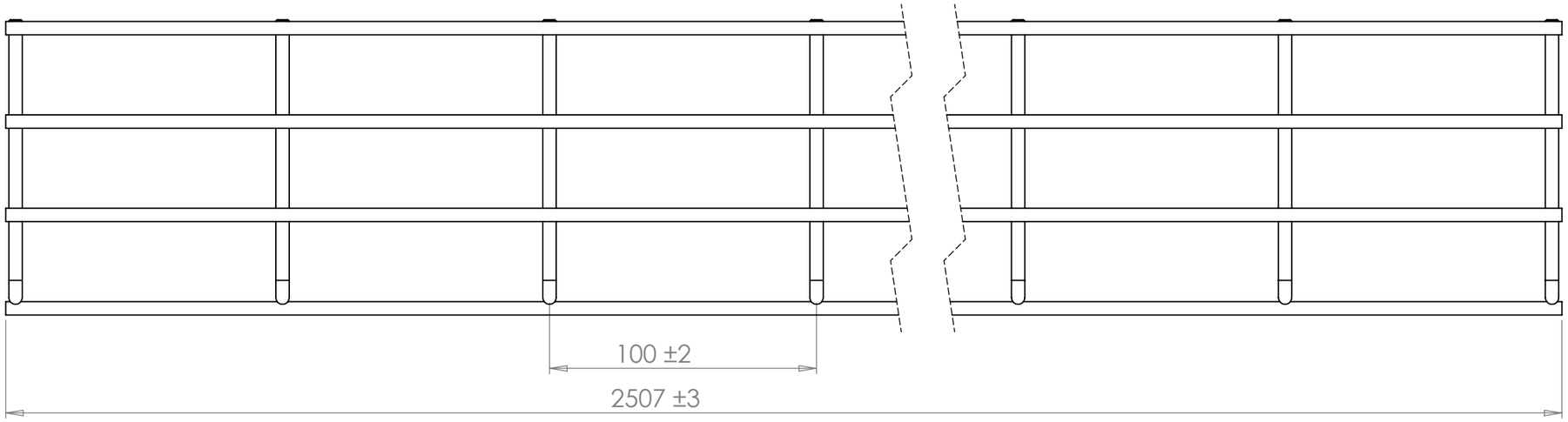

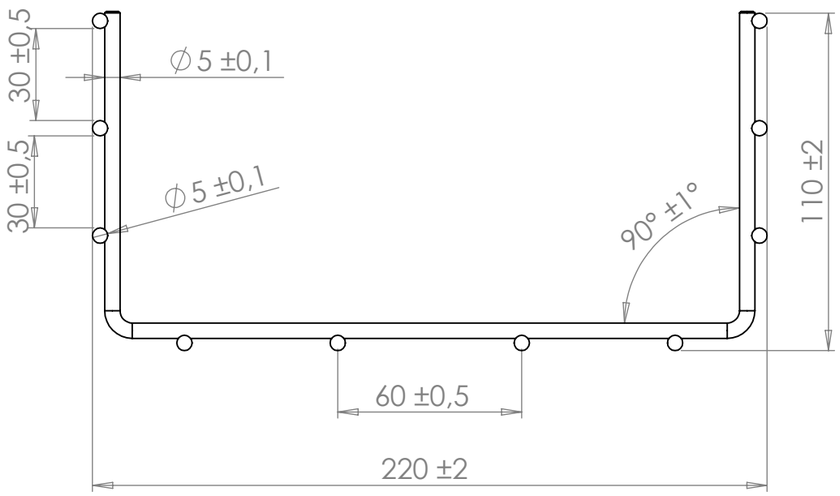

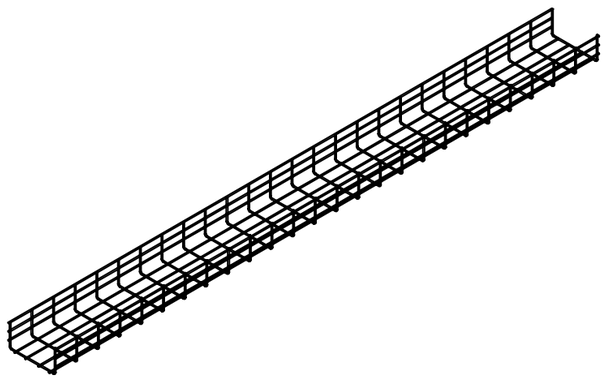

Part Number	E-Number	Surface
0122	1133104	Zink plated DIN 50961
0222	1133118	Hot dip galvanized DIN 50979
0322	1133132	Acid proof AISI 316L
0422	1133146	Stainless Steel AISI 304L

© 2018 Axelent AB

Axelent AB
+46 (0)370 37 37 30
Hillerstorp, Sweden

C-number **C-0005737-01**	Material		Finish / Color	Created By **suem**
Description X-Tray 220x110x2500	Part / Assembly-ID **Default(A-0004901)**	Rev. **A.0**	Sheet Name **Sheet1**	Created **2011-08-12**
	Drawing-ID **KR-0022**	Rev. **B.2**	Sheet **A3**	Changed **2020-10-27** **svma**
Unless otherwise specified; SS-ISO 2768-1 MEDIUM	Weight (calculated) **5,47 kg**		Scale **1:20**	